SYMBOLS

INFO This instruction identifies particularly important information and gives you additional messages or tips.

➔ The arrow prompts you to carry out an action.

• The dot indicates results or necessary preconditions.

P1.18 Instructions with this indication only relate to the corresponding type of your Pinion gearbox.

The play button draws your attention to a Pinion video on the topic at https://pinion.eu/en/service-videos/.
For direct access scan the QR code – see **SERVICE VIDEOS**, page 64.

WARNING INSTRUCTIONS

⚠ WARNING **This instruction warns of a hazardous situation, which if not avoided can result in death or serious injury.**

– ... and shows you how to avoid it.

⚠ CAUTION **This instruction warns of a hazardous situation, which if not avoided can result in minor or moderate injury.**

– ... and shows you how to avoid it.

NOTICE **This instruction warns of potential material damage.**

– ... and shows you how to avoid it.

NOTICE – ENVIRONMENT **This instruction warns of potential environmental damage.**

– ... and shows you how to avoid it.

FOREWORD

You are now the owner of a modern Pinion gearbox – made in Germany.

This owner's manual is a part of your Pinion product and contains information on how to operate, adjust, install and maintain your product safely.

Read this manual carefully before using your Pinion product. Always observe and follow all instructions in this manual – and also the user instructions from other manufacturers whose products are used on your bicycle (chain, wheels, quick release skewers etc.).

Remember that the mechanic is responsible for the suitability and compatibility of all components that interact with your Pinion product.

⚠ WARNING If the instructions in this manual are not observed, this may result in accidents with fatal consequences or serious injury.

Keep this manual for other users of your Pinion product. Make sure that every user reads, understands and observes this manual.

If you ever sell or give away your Pinion product, give this manual to the new owner.

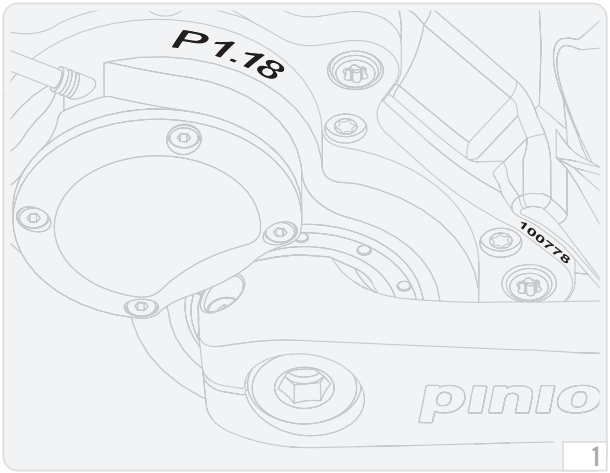

1

The illustrations in this manual may be different from your Pinion product, but the required work steps are the same for all gearbox types – unless otherwise specified.

The gearbox type of your Pinion gearbox is stamped on the left side of the gearbox above the cable box cover – the 6-digit serial number on the edge of case. (fig. 1)

Please note that the transmission will have a different feel compared to a derailleur system. Familiarize yourself with your new Pinion gearbox and the differences in your transmission during your initial rides.

See https://pinion.eu for many more tips and more information on your Pinion product.

We wish you all the best with your leisure and competitive riding.

The Pinion Team

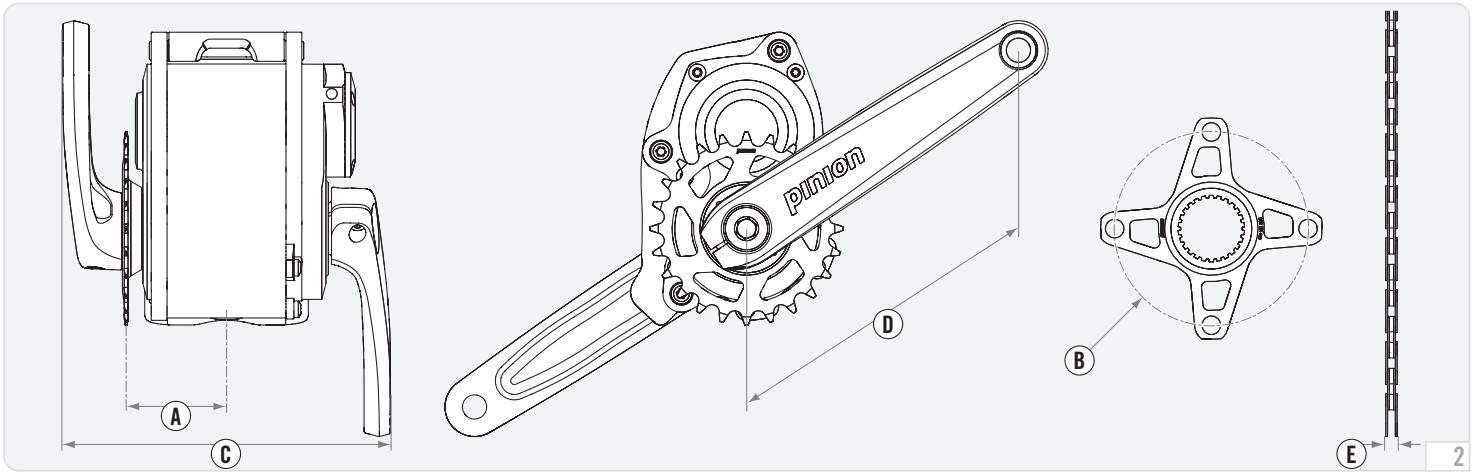

Gearbox type		P1.18	P1.12	P1.9XR	P1.9CR
Chain line (A) – with Pinion chain ring	mm	54*			
Pitch circle ø (B), Pinion spider		104			
Q-factor (C)		174			
Crank length** (D)		180 / 175 / 170 / 165 / 160 / 155			
Crank axle standard		Pinion Standard			
Dimension, chain (E)	mm	6.6 – 6.8 (9-speed)			
Gears via rotary shifter		18	12	9	
Gear ratio, total	%	636	600	568	364
Gear steps, constant		~ 11.5	~ 17.7	~ 24.3	~ 17.5
Ratio in 1st gear		1.82			1.30
Ratio in the fastest gear		0.29	0.30	0.32	0.36
Oil volume/type	ml (oz)	60 (2.0) / Pinion			
Input torque max.	N·m (lbf·in)	250 (2213)			
Rider weight max.***	kg (lb)	110 (243)			

* If the Pinion spider is used, the chain line or beltline is defined by the contact surface (56 mm) of the spider and the dimension/geometry of the chain ring or the belt sprocket that is used – e.g.: 56 mm + ½t = 58 mm chain line (with symmetrical chain ring with thickness t=4 mm).

** optional

*** Rider + backpack etc.

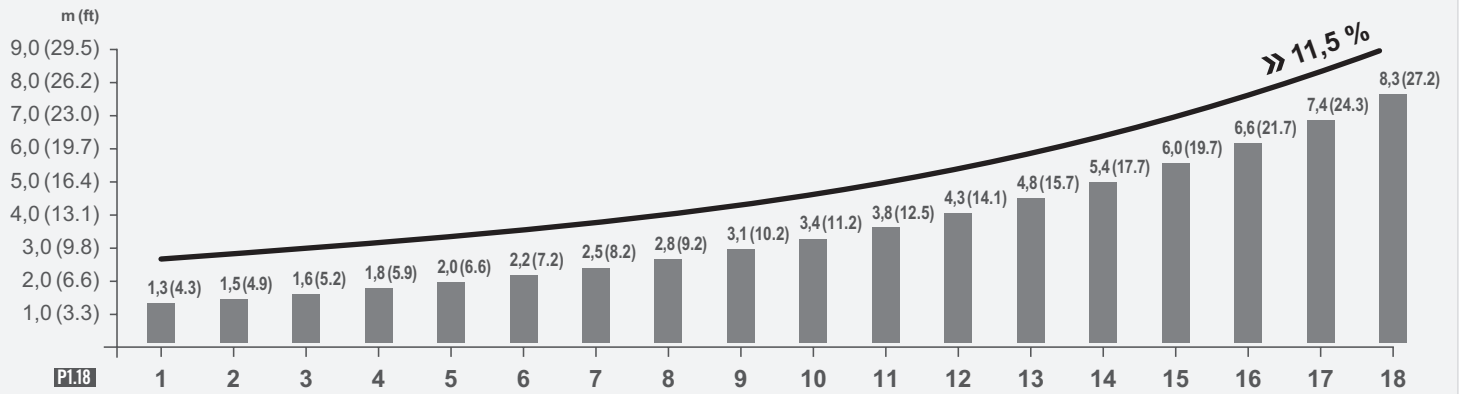

3

DEVELOPMENT

ⓘ INFO P1.18 The specified values in m (ft) per crank revolution correspond to the recommended ratio for sprocket (rear) : chain ring (front) 26 : 30 = 0.866.

The calculation is based on the tyre size 28×1.4 (37-622). (fig. 3)

You can find a convenient program for calculating your individual ratio as well as the development values of other types of Pinion gearbox at https://pinion.eu.

TIGHTENING TORQUES

	Tightening torque in N·m (lbf·in) max.	
Gearbox retaining screws	10 (89)	with screwlock, medium-strength
Central crank screws	10 (89)	with screwlock, medium-strength
Crank clamp screws	10 (89)	with *SCHNORR*® lock washer, dry
Chain ring lock ring	40 (354)	dry
Cable box cover housing screws	1.5 (13)	dry
Rotary shifter housing clamping screw	2 (18)	dry
Rotary shifter cover housing screw	0.4 (4)	dry
Shifting cable clamp screws	0.4 (4)	dry
Oil drain plug	3 (27)	dry
Pinion chain tensioner retaining screws	4 (35)	dry
Pulley retaining screws	2 (18)	dry

INTENDED USE

⚠WARNING Use other than as intended may cause accidents resulting in death or serious injury.

Pinion gearboxes are designed and intended exclusively

- for installation on bicycle frames designed for the purpose with stiff rear triangle and a corresponding gearbox interface in the area of the bottom bracket.
- for installation on bicycle frames designed for the purpose with suspension rear triangle and a corresponding gearbox interface in the area of the bottom bracket – and, if necessary, in combination with a suitable chain or belt tensioner system that compensates for the distance between the chain ring and sprocket or between the belt sprockets that varies with the movement of the suspension.
- for use with a single-gear rear freewheel rear hub without a back pedal brake*.
- for use with a rear cassette freewheel rear hub with spacers for setting the correct chain line.
- for use with a rear hub with an electric drive motor.
- for use with a suitable chain or belt tensioner system.
- for the maximum approved rider weight – see **TECHNICAL DATA**, page 38.

Pinion gearboxes must never be used in combination with a stiff single gear rear hub!

BASIC SAFETY INSTRUCTIONS …

Always remember that cycling can be dangerous for the rider and other people and also for the bicycle and its components. Accidents resulting in death or serious injury may happen even with the best protective equipment and all required safety devices.

Use your common sense and avoid dangerous actions.

* A back pedal brake cannot be used with the freewheel integrated in the gearbox!

… FOR INSTALLATION & MAINTENANCE

⚠ WARNING A gearbox damaged as a result of faulty or non-approved installation may cause an accident.

- Don't overestimate your technical ability. Have all installation and maintenance work done by a specialist workshop for bicycles. That is the only way to be sure that the work is done correctly. For a list of Pinion dealers and specialist workshops, refer to https://pinion.eu/en/dealer-overview/. For direct access scan the QR code – see **OVERVIEW OF DEALERS**, page 64.
- Installation work that is not described in this owner's manual (e.g. opening the gearbox, retightening the housing screws, etc.) must be done exclusively by a specialist workshop authorized by Pinion or by the Pinion company itself.
  Do not attempt work of this type yourself – you will not only endanger your own health but you may be exposed to liability claims.
- Never modify your Pinion product in any way (e.g. grinding, drilling, painting, etc.).
- Always use a torque wrench designed for the required torque at installation steps that require a specific tightening torque.
- Keep your bicycle in good technical condition at all times.

⚠ WARNING Unsuitable accessories and additional components may cause accidents.

- Use original Pinion parts and lubricants exclusively.
- Use a rear wheel quick release system that reaches the required closing pressure of at least 4000 N exclusively. It is best to use a rear hub that is permanently fastened with axle nuts in the rear triangle, or which has a through axle.
- Use exclusively a bicycle chain with a width of 6.6 – 6.8 mm (9-speed) and an appropriately sized sprocket, or a toothed belt system approved by Pinion.

… WHEN ON THE ROAD

⚠ WARNING Component failure may cause accidents.

- Before every ride make sure that the quick release system of your wheels is correctly installed and that your wheels cannot be accidentally released.
- Before every ride make sure that your brakes are operating correctly and the brake pads are not excessively worn.
- Before every ride make sure your chain or belt is correctly tensioned.
- Never exceed the maximum approved rider weight – see **TECHNICAL DATA**, page 38.
- Avoid jumping from a great height – this exposes your Pinion gearbox to very high load peaks.
- Never ride with your Pinion gearbox if damage (to the gearbox housing, cranks, etc.) is visible, unusual noises can be heard, or if you have any doubts the condition of the gearbox. Have your Pinion gearbox checked by a specialist workshop for bicycles.
  For a list of Pinion dealers and specialist workshops, refer to https://pinion.eu/en/dealer-overview/. For direct access scan the QR code – see **OVERVIEW OF DEALERS**, page 64.
- Do not ride with your Pinion gearbox below -20 °C (-4 °F) or above 40 °C (104 °F) ambient temperature.

⚠ WARNING Incorrect riding behaviour or improper equipment may cause accidents.

- Always obey the traffic regulations of the country where you are riding your bicycle (lights, reflector, etc.) and also the regulations governing off-road mountain biking.
- Always wear a good-quality, undamaged cycling helmet (e.g. ANSI-certified) and clothing that is close-fitting but does not hinder movement.
- Ride your bicycle only when you are in good physical condition and your bicycle and all its components are in good condition.

RUNNING IN THE GEARBOX

INFO The surfaces of the gears and transmission components are smoothed down over the first 1000 km of cycling. Following that, the gearbox will run more smoothly – with slick shifting operations.
Any roughness present in the drive or when shifting gear is normal when your Pinion gearbox is new, and is nothing to be concerned about!

BEFORE EVERY RIDE

WARNING **Component failure may cause accidents.**

- Before every ride make sure that the quick release system of your wheels is correctly installed and that your wheels cannot be accidentally released.
- Before every ride make sure that your brakes are operating correctly and the brake pads are not excessively worn.
- Before every ride make sure your chain or belt is correctly tensioned.
- Never ride with your Pinion gearbox if damage (to the gearbox housing, cranks, etc.) is visible, unusual noises* can be heard, or if you have any doubts the condition of the gearbox. Have your Pinion gearbox checked by a specialist workshop for bicycles.

WARNING **A chain or belt that continues to rotate when the crank is stationary because the sprocket or belt sprocket and rear hub do not move easily during freewheel may cause an accident.**

- Before every ride make sure that the sprocket or belt sprocket and rear hub freewheel smoothly.

INFO * Cracking or creaking noises when pedalling do not come from the inside of your Pinion gearbox, but usually originate from a loosened bolted connection – in most cases the noise is eliminated after tightening the pedals, for example. If not, you can find help in a specialist workshop for bicycles – they will know about other possible problem areas which can often be resolved with little effort.

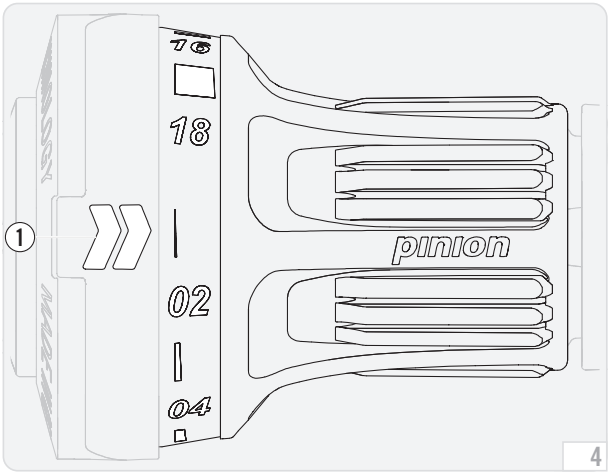

4

SHIFTING CORRECTLY

INFO The mark (1) on the rotary shifter cover indicates the selected gear.

INFO You can shift through several gears with one movement (e.g. from 06 to 02).

INFO You can shift at a standstill or with the crank rotating backwards and this protects the gearbox.

INFO Downshifting (18–17–16– … –01) under load is possible to a limited extent. The shifting operation is not executed if the pressure on the crank or pedal is too high.

INFO A mechanism in the gearbox allows upshifts (01–02– … –18) under load. This is possible during all gear shifts, except when shifting between each of the sub-units. At these points the pressure on the pedal must be momentarily released.

- ➔ Always reduce the pressure on the pedal during downshifts (18–17–16– … –01).
- ➔ **P1.18** When shifting up from 06 to 07 and from 12 to 13 always reduce the pressure on the pedal.
- ➔ **P1.12** When shifting up from 04 to 05 and from 08 to 09 always reduce the pressure on the pedal.
- ➔ **P1.9^{W}** **P1.9^{CR}** When shifting up from 03 to 04 and from 06 to 07 always reduce the pressure on the pedal.

INFO Occasionally it can happen that your crank "drops" by about 10° after a shifting operation, you feel a short jolt caused when a gear is not engaged directly until the pawl has engaged in the next tooth. This phenomenon cannot be eliminated, but it does not lead to damage to the gearbox.

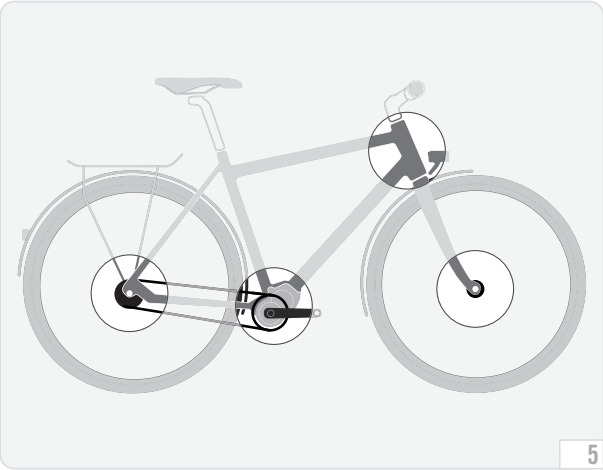
5

REGULAR MAINTENANCE WORK

INFO The frequency of use and weather conditions determine the frequency of maintenance work on your Pinion gearbox.
Carry out the following maintenance operations more frequently if you use your bicycle under extreme conditions (rain, road grit, dirt, long distances etc.).

NOTICE **Corrosion and material damage by penetration of water.**
- Never use a pressure cleaner or steam cleaner to clean your bicycle – the seals in the bicycle components cannot withstand this pressure.
- Be careful even if you use an ordinary hose. Never direct a spray of water directly at the areas of a seal. (fig. 5)

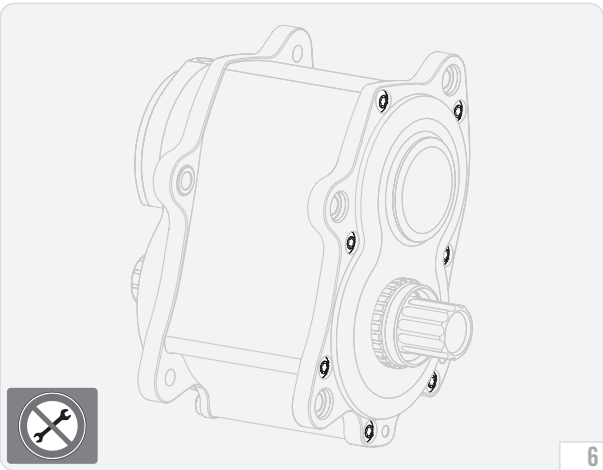
6

NOTICE **Irreparable damage to the gearbox housing or leakage.**
- Never tighten or loosen gearbox housing screws. (fig. 6)
- Gearbox housing screws are exclusively allowed to be moved in a specialist workshop authorised by Pinion, or by Pinion itself.

	After every ride[1]	every 250 km	every 500 km	every 10 000 km[2]
➔ Clean the gearbox with water, detergent and a brush.	✓			
➔ Clean the chain/belt, chain ring and sprocket or belt sprockets as well as, if necessary, the pulleys of the chain tensioner.		✓[3]		
➔ Check the chain or belt tension and correct it if necessary – see **CHAIN/TOOTHED BELT – LENGTH & TENSION**, page 61.			✓	
➔ Oil the chain lightly.		✓[3]		
➔ Check that the chain tensioner pulleys move smoothly and inspect for wear (excessive play, loud running noises) – replace pulleys if necessary – see **EXCHANGING PULLEYS (PINION CHAIN TENSIONER)**, page 58.				✓
➔ Check for wear on shifting cables, shifting cable outer sleeves, chain/belt, chain ring and sprocket or belt sprockets, renew if necessary.			✓	
➔ Check shifting cables for tension and freedom of movement, adjust or renew if necessary – see **ADJUSTING SHIFTING**, page 46.			✓	
➔ Open cable box. Thoroughly clean cable pulley, sliding surface and cable box interior, planetary gears, etc. and grease them liberally – see (fig. 13), page 50.			✓	
➔ Check that all screw fasteners – except gearbox housing screws – have the required tightening torque and adjust if necessary – see (fig. 6), page 44, – see **TIGHTENING TORQUES**, page 39.			✓	
➔ Perform an oil change – see **OIL CHANGE**, page 47.				✓

[1] In particular in wet conditions or if exposed to road grit. I [2] Alternatively 1× each year. I [3] Or after each ride in wet conditions and if exposed to road grit.

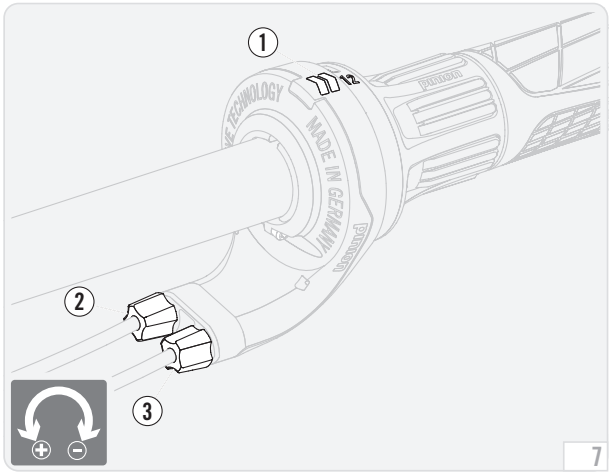

7

ADJUSTING SHIFTING

INFO Your Pinion gearbox is correctly adjusted if the shifting operation is performed immediately (cable tension), all gears can be selected with minimum force (cable tension) and the display on the rotary shifter matches the selected gear (synchronization).

ADJUSTING CABLE TENSION

INFO The cable tension is in the correct range if the ends of the shifting cable outer sleeves are within the stops on the gearbox and rotary shifter housing without play and are not under tension and it has approx. 2 mm rotary play.

➔ Unscrew both adjusting screws ¼ revolution counterclockwise (+).
- Cable tension is increased.
- Force required is increased.

or:

➔ Screw in both adjusting screws ¼ revolution clockwise (-).
- Cable tension is reduced.
- Play on the rotary shifter is increased, the shifting operation is less immediate.

SYNCHRONISING ROTARY SHIFTER POSITION

➔ Shift rotary shifter clockwise (01–02–03– …) to the stop towards the last position (18 or 12 or 09).

➔ Check that the symbol for the last position (18 or 12 or 09) is centrally placed beside the mark (1).

➔ Screw in adjusting screw (2) ¼ revolution clockwise (-).
Unscrew adjusting screw (3) ¼ revolution counterclockwise (+).
- The rotary shifter scale moves towards position 17 or 11 or 08.

or:

➔ Unscrew adjusting screw (2) ¼ revolution counterclockwise (+).
Screw in adjusting screw (3) ¼ revolution clockwise (-).
- The rotary shifter scale moves towards position 01.

➔ Check setting and repeat procedure if necessary

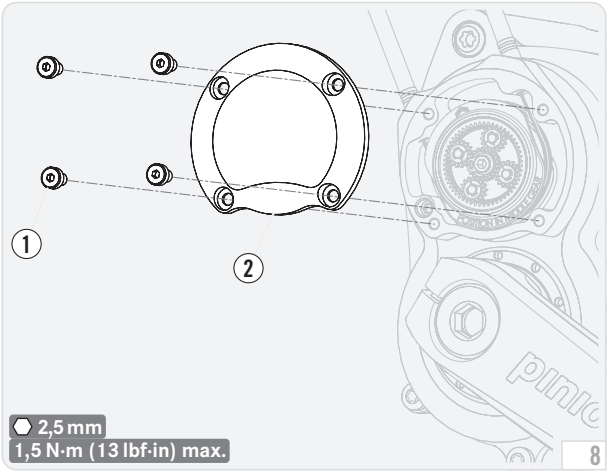

OIL CHANGE

NOTICE – ENVIRONMENT **Dispose of used lubricants and oils correctly and in accordance with the applicable regulations – never dispose of waste in the sewage system or in the ground.**

INFO Every 10 000 km (6 200 miles) or 1× each year, the oil in your Pinion gearbox must be changed.

Use original Pinion gearbox oil exclusively. Oil fill volume: 60 ml (2.0 oz).

INFO In the 1st oil change of your Pinion gearbox, the volume of drained oil will be less than 60 ml (2.0 oz) – nevertheless, comply with the fill volume that we specify!

INFO The Pinion oil service-set (P8903) enables you to extract used gearbox oil from the gearbox quickly and cleanly.

- Unscrew the housing screws (1) of the cable box cover (2).
- Remove cable box cover.

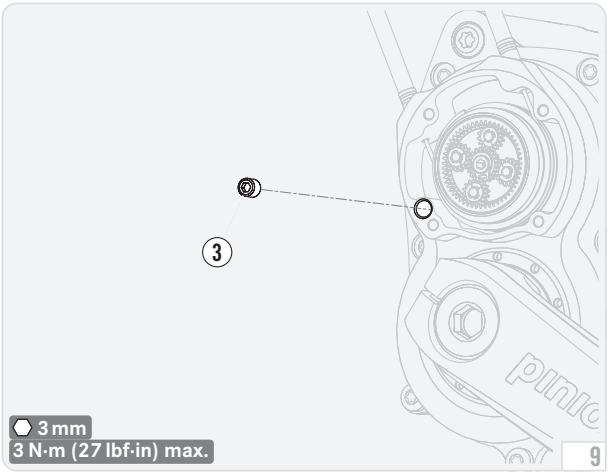

- Unscrew the screw plug (3) in the filler opening.
- Have a drainage tray ready.
- Place bicycle on its side.
- Drain used oil completely from the filler opening into the drainage tray.
- Place the bicycle upright or replace on repair stand.
- Add fresh oil – oil fill volume: 60 ml (2.0 oz).
- Screw the screw plug (3) into the filler opening and tighten with a tightening torque of 3 N·m (27 lbf·in).
- Put on cable box cover (2).
- Tighten housing screws (1) with a tightening torque of 1.5 N·m (13 lbf·in).
- Enter oil change date – see **OIL CHANGE DATA**, page 67.

• The oil change is complete.

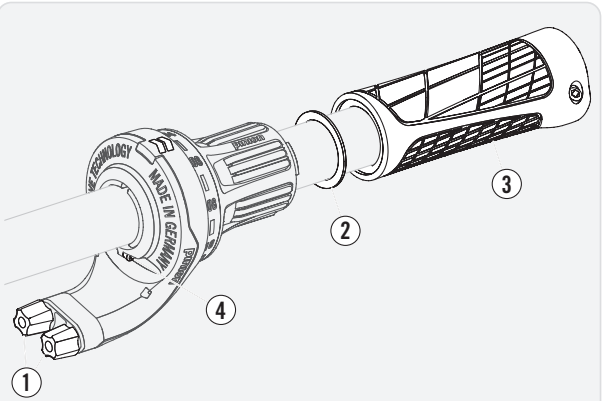

⬡ 2,5 mm
2 N·m (18 lbf·in) max.

10

INSTALLING ROTARY SHIFTER

⚠ WARNING Incorrect installation can restrict braking and steering and cause accidents.

– Make sure that the position of the rotary shifter housing does not interfere with the full range of operation of the brake lever blade.
– Make sure that the shifting cables do not interfere with the handlebar movement.

⚠ WARNING Incorrectly mounted handlebar can fail and cause an accident.

– Always follow the manufacturer's directions for carbon handlebars.

ⓘ INFO The Pinion rotary shifter housing is generally correctly positioned with the adjusting screws (1) for the shifting cable pointing down and slightly forward – i.e. in the 4–5 o'clock direction. In this position you can best see the current gear and the shifting cables do not interfere with the brake lever blade.

ⓘ INFO In the event of a fall it is advantageous if the brake lever blade can twist. This reduces the danger of irreparable damage – including the handlebar. Tighten the clamp screws of the brake lever blade just tight enough so it cannot be twisted by hand.

ⓘ INFO You will only need the spacer ring (2) if you are using a handlebar grip which has a tendency for touching the rotary shifter.

➔ Use carbon assembly paste on the clamp area for carbon handlebars.
➔ Slide the rotary shifter housing onto the handlebar.
➔ Slide handlebar grip (3) and if applicable bar end onto the handlebar.
➔ Push rotary shifter housing onto the handle of the handlebar to the stop and rotate to the correct position.
➔ Tighten clamping screw (4) with a tightening torque of 2 N·m (18 lbf·in).
➔ Make sure that the rotary shifter can be twisted freely – install a spacer ring (2) if necessary.
• The installation of the rotary shifter is complete.

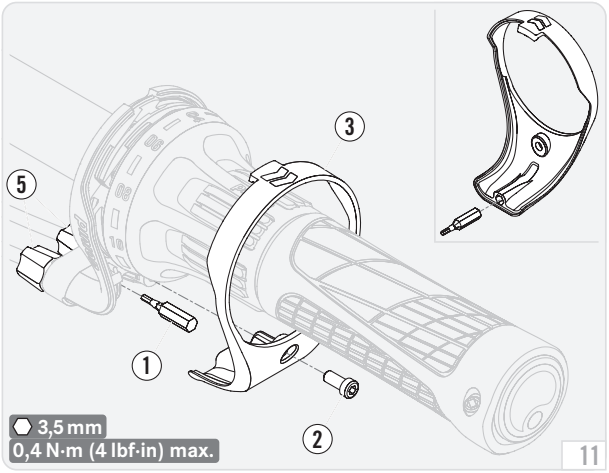

INSTALLING OR REPLACING SHIFTING CABLES

INFO You operate your Pinion gearbox with 2 shifting cables.
The clamps for the shifting cable ends are in the rotary shifter.
It is essential that you use commercially available shifting cables with dimension Ø 1.1–1.25 mm, nipple 4.4 × 4.4 mm. Genuine Pinion shifting cables guarantee optimum shifting behaviour and can be ordered from one of the Pinion bicycle dealers.

INFO As a tool for dealing with breakdowns when you are out riding, you will find a bit (size 1.5 mm/4 mm) inserted inside your rotary shifter (1) – this fits the clamping screws of the cable clamps. You can use the rotary shifter cover as a tool holder if necessary.

INFO During installation of the shifting cables, you will need to move the sun gear of your Pinion gearbox, so it is a good idea if the right crank and chain ring are fitted. This makes it much easier for you to brace the selector shaft.

➔ Unscrew housing screw (2) of the rotary shifter cover (3).
➔ Unhook rotary shifter cover at top and remove.

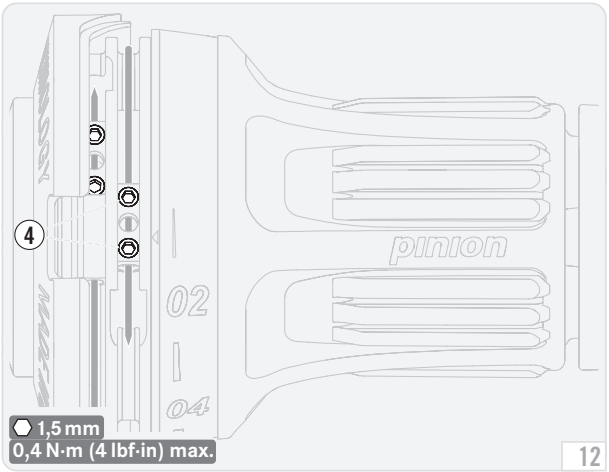

INFO The clamp screws are easily accessible at rotary shifter positions **01 and 18** or **01 and 12** or **01 and 09** depending on the type of your Pinion gearbox.

➔ Slacken clamp screws (4) – 2× per shifting cable end.
➔ Pull shifting cables out of the rotary shifter.
➔ Cut off the spliced-on shifting cable ends with a sharp wire cutter.

➔ First, screw in adjusting screws (5) completely – then unscrew 3 revolutions.
• This ensures an adequate adjustment range for subsequent adjustments of the transmission.

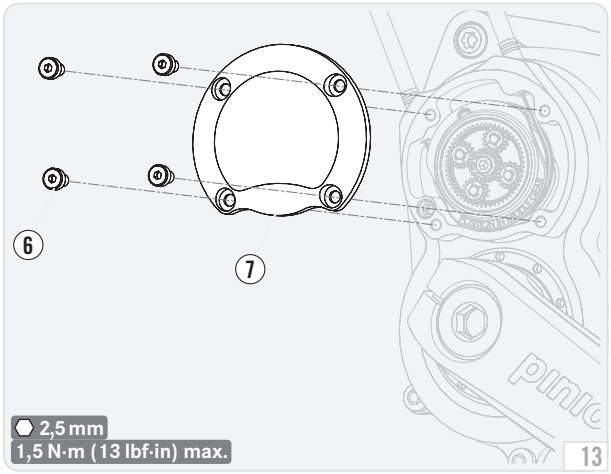

- ➔ Unscrew the housing screws (6) of the cable box cover (7).
- ➔ Remove cable box cover.

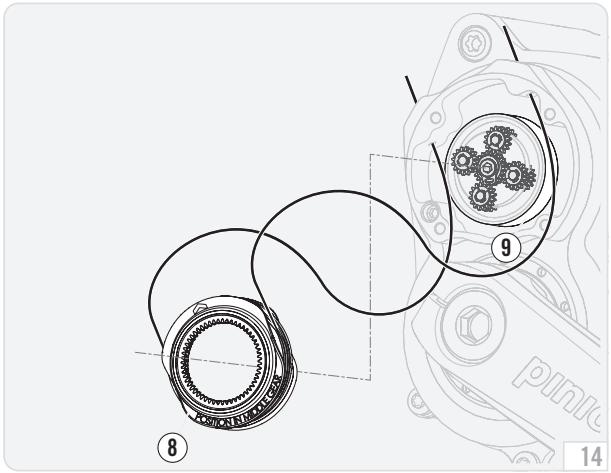

- ➔ Remove the cable pulley (8) with the shifting cables from the cable box.
- ➔ Remove shifting cables from the cable pulley.
- ➔ Thoroughly clean the cable pulley.
- ➔ Thoroughly clean the cable box interior.
- ➔ Thoroughly clean planetary gears and sun gear and grease them liberally.
- ➔ Lightly grease sliding surface (9) of the cable pulley.

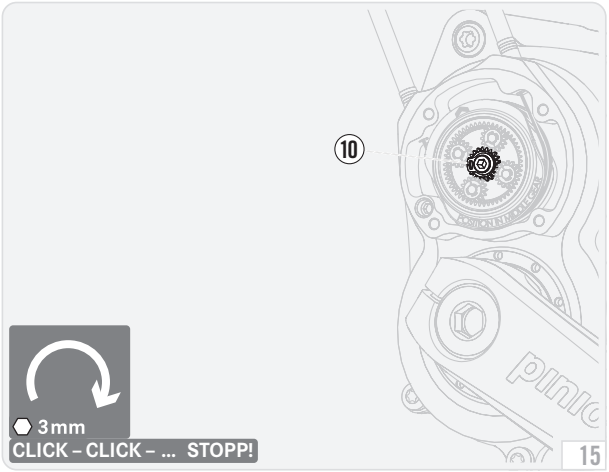

➔ Hold crank and chain ring in position.
➔ Rotate sun gear (10) clockwise to the stop with a 3 mm Allen wrench.
• 1st gear is engaged.

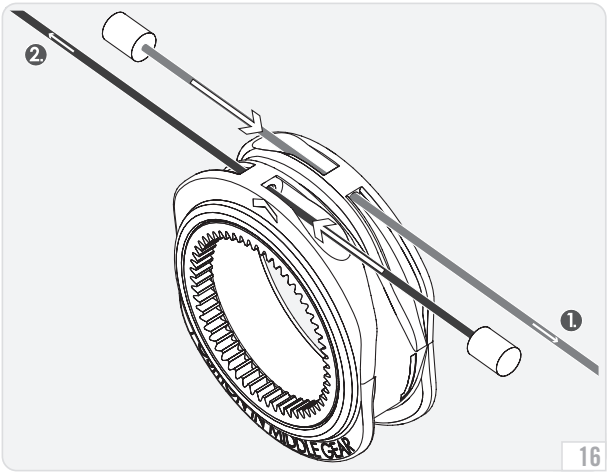

➔ Insert new shifting cables through the holes in the cable pulley.

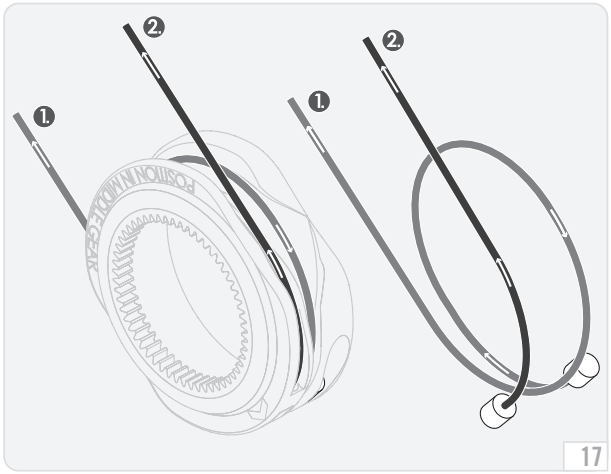

17

NOTICE **Correctly wound up shifting cables will not cross over one another at any point!**

- ➔ Wind left shifting cable (output 1.) onto cable pulley – 1 ¼ turns.
- ➔ Wind right shifting cable (output 2.) onto cable pulley – ¼ turn.
- ➔ Hold the shifting cables with the cable pulley with 1 hand so the shifting cables cannot unwind.

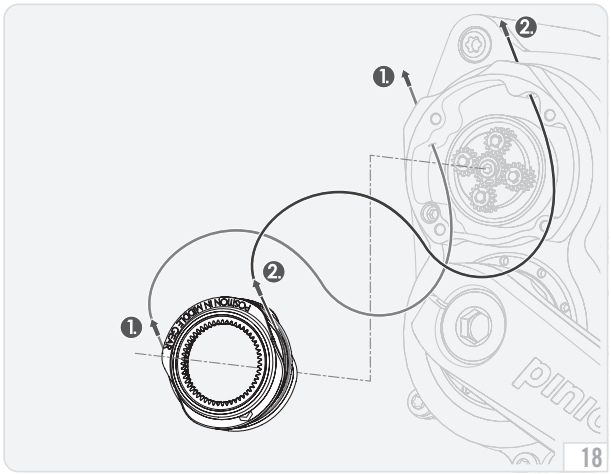

18

- ➔ Guide the shifting cables through the outputs of the cable box.
- ➔ Keep the shifting cables taut.

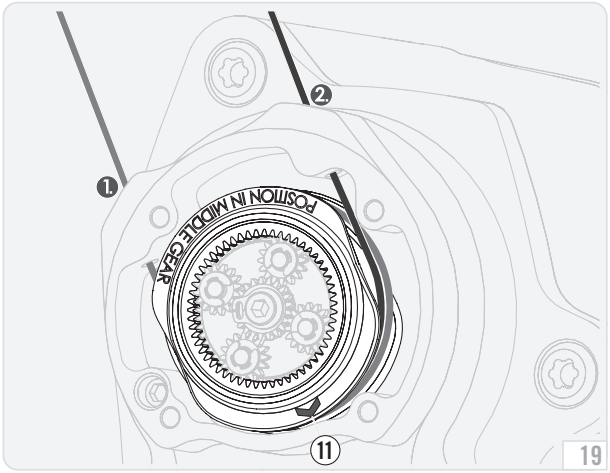

- ➔ Insert cable pulley into cable box.
- ➔ Make sure that the marking (11) of the cable pulley is centrally positioned at the apex of the shifting cables.
  - Cable pulley is located in the position for 1st gear.
  - Right shifting cable (output 2.) projects about 15 cm further out of the cable box ring.
- ➔ Make sure that both shifting cables are positioned correctly in the cable pulley guides (fig. 17).
- ➔ Keep the shifting cables taut.

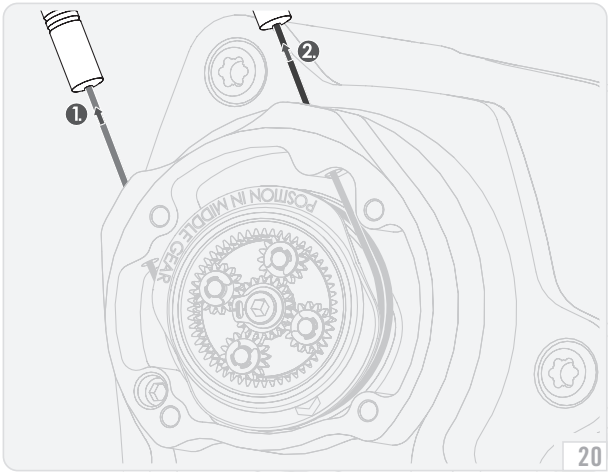

NOTICE **The shifting cables have a tendency to come unspliced on outer sleeve end caps made from metal.**

- – Use outer sleeve end caps made from plastic (Ø 5.8 mm).
- ➔ Insert the left shifting cable (output 1.) through the shifting cable outer sleeve.
- ➔ Insert the right shifting cable (output 2.) through the shifting cable outer sleeve.
- ➔ Make sure that both shifting cables are positioned correctly in the cable pulley guides (fig. 17).

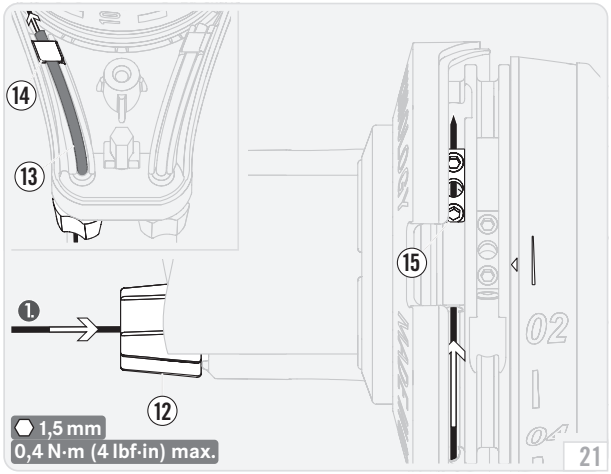

NOTICE **Damage to the shifting cable liner.**

- Carefully guide shifting cables through the shifting cable liners.
- Remove shifting cable liners first if necessary and guide back in together with the shifting cable.

➔ Switch rotary shifter to position 01.

➔ Insert the left end of the shifting cable (output 1.) through rear adjusting screw (12) – as seen in riding direction – shifting cable liner (13), shifting cable guide (14) and shifting cable clamp (15).

➔ Keep the left end of the shifting cable under tension.

➔ Make sure that the ends of the shifting cable outer sleeve are firmly in the stops on the adjusting screw and cable box.

➔ Tighten the two clamp screws alternately with a tightening torque of 0.4 N·m (4 lbf·in).

➔ Cut the left end of the shifting cable as close as possible behind the cable clamp with a small, sharp wire cutter.

INFO Pull the cable clamp out of its seat somewhat. Then, it will be easier to cut off the end of the shifting cable.
Following that, make sure that the cable clamp is once again located in its seat up to the stop.

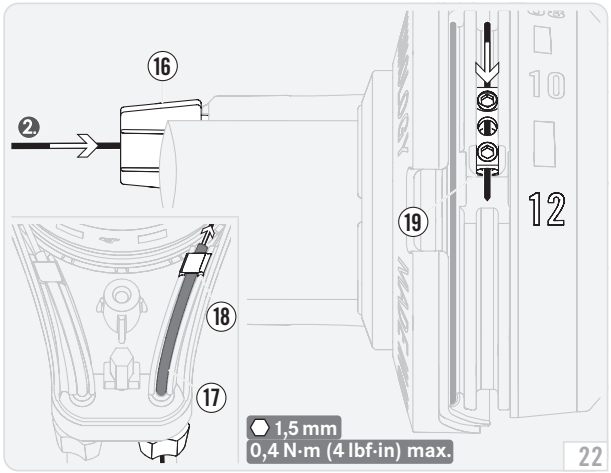

➔ **P1.18** Rotate rotary shifter clockwise (01–02–03– … –18) to position 18.

or:

➔ **P1.12** Rotate rotary shifter clockwise (01–02–03– … –12) to position 12.

or:

➔ **P1.9ST** **P1.9XR** Rotate rotary shifter clockwise (01–02–03– … –09) to position 09.

➔ Insert the right end of the shifting cable (output 2.) through front adjusting screw (16) – as seen in riding direction – shifting cable liner (17), shifting cable guide (18) and shifting cable clamp (19).

➔ Keep the right end of the shifting cable under tension.

➔ Make sure that the ends of the shifting cable outer sleeve are firmly in the stops on the adjusting screw and cable box.

➔ Tighten the two clamp screws alternately with a tightening torque of 0.4 N·m (4 lbf·in).

➔ Cut the right end of the shifting cable as close as possible behind the cable clamp with a small, sharp wire cutter.

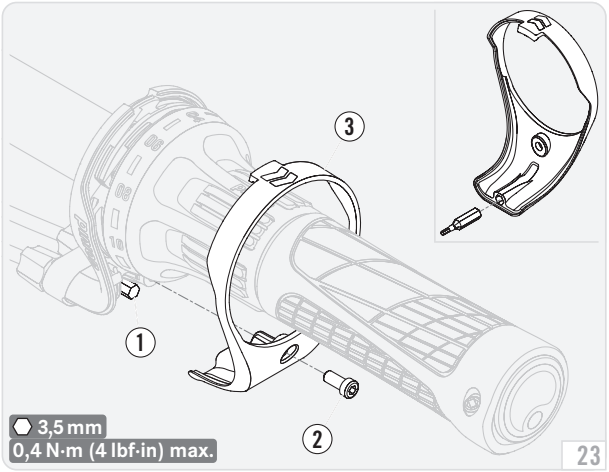

- ➔ Pull bit (1) out of the rotary shifter cover if necessary and insert it into its seat inside the rotary shifter.
- ➔ Hook rotary shifter cover (3) in at top and put on.
- ➔ Tighten housing screw (2) with a tightening torque of 0.4 N·m (4 lbf·in).

- ➔ Test shifting function, if necessary adjust cable tension with the adjusting screws – see **ADJUSTING SHIFTING**, page 46.

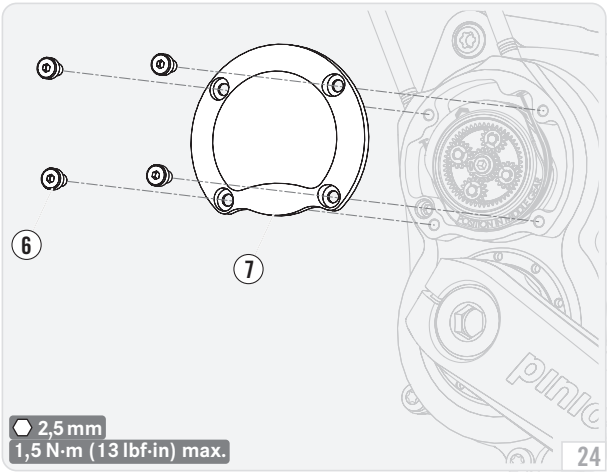

- ➔ Put on cable box cover (7).
- ➔ Tighten housing screws (6) with a tightening torque of 1.5 N·m (13 lbf·in).

- The replacement of the shifting cables is complete.

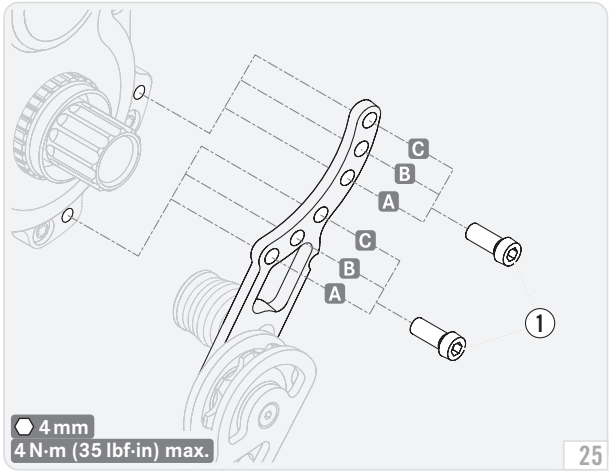

25

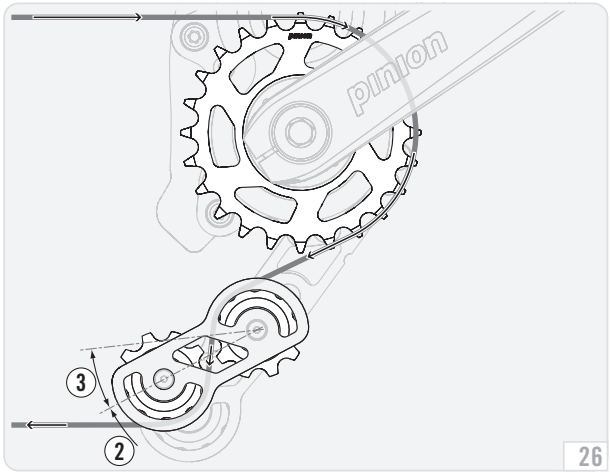

26

INSTALLING PINION CHAIN TENSIONER

WARNING **If a chain tensioner fails because of improper use, it can cause an accident.**

The Pinion chain tensioner is designed and intended exclusively for use with a Pinion gearbox.

– Only ever install the Pinion chain tensioner on the chain tensioner socket provided for this purpose on your Pinion gearbox.

INFO The Pinion chain tensioner can be installed in position **A**, **B** or **C** – depending on the mounting position of your Pinion gearbox.

Make sure that your Pinion chain tensioner can transfer the tension effect in full to your bicycle chain in the position that you select, but also cannot contact the chain stay or tyre of your bicycle at any position.

➔ Remove chain.
➔ Remove crank and chain ring – see **REPLACING CHAIN RING**, page 58.
➔ Tighten retaining screws (1) with a tightening torque of 4 N·m (35 lbf·in).
➔ Install crank and chain ring – see **REPLACING CHAIN RING**, page 58.
➔ Position chain and guide it through the tension mechanism. (fig. 26)
➔ Connect chain.

INFO Your chain has the correct length if the tension mechanism of the chain tensioner is pretensioned (2), but can still be moved upwards (3).

NOTICE **In full-suspension bicycles, always check the chain length or the mobility of the chain tensioner mechanism with the rear triangle suspension fully compressed!**

• The installation of the Pinion chain tensioner is complete.

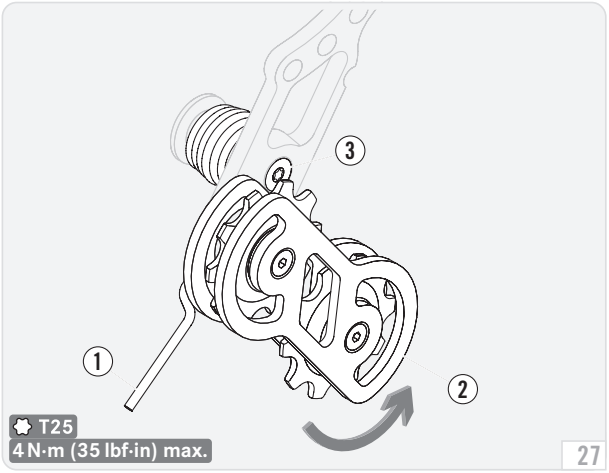

ADJUSTING CHAIN TENSION (PINION CHAIN TENSIONER)

INFO If your chain frequently hits the chain stay on your bicycle frame while you are riding, it may be necessary to increase the chain tension.
If the chain or cranks continue to rotate although the rear wheel freewheel is operating correctly, or if the chain tensioner rattles, it may be necessary to reduce the chain tension.

INFO Before proceeding with the following actions, make sure that your chain is the correct length – see **INSTALLING PINION CHAIN TENSIONER**, page 56.

- ➔ Remove the chain and take it off the chain ring and sprocket.
- ➔ Disconnect the spring leg (1) at the tension mechanism (2).
- ➔ Rotate the tension mechanism forward.
- ➔ The screw (3) of the spring shaft is accessible.

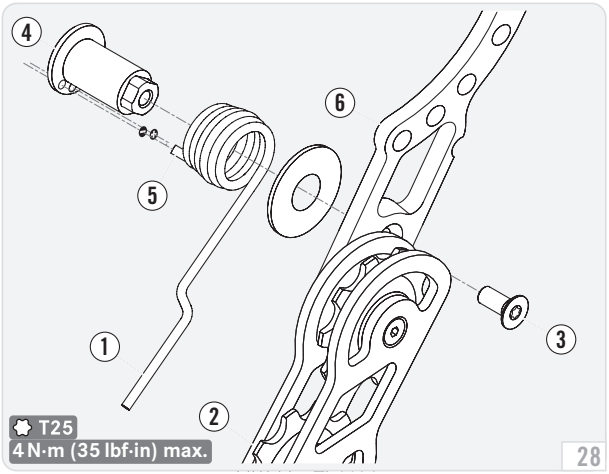

- ➔ Unscrew the screw (3) of the spring shaft (4).
- ➔ Pull the spring shaft out of the baseplate (6).
- ➔ Move the spring end pin (5) counterclockwise (+).
- The chain tension is increased.

or:

- ➔ Move the spring end pin (5) clockwise (–).
- The chain tension is reduced.
- ➔ Insert the spring shaft into the baseplate (6).
- ➔ Screw in the screw (3) of the spring shaft (4) and tighten with a tightening torque of 4 N·m (35 lbf·in).
- ➔ Position the chain on the chain ring and sprocket.
- ➔ Attach spring leg (1) to tension mechanism (2).
- ➔ Check the setting.

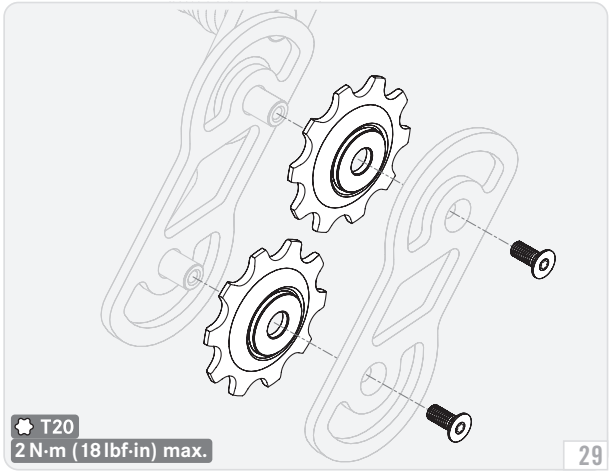

EXCHANGING PULLEYS (PINION CHAIN TENSIONER)

NOTICE **Chain does not run smoothly, inaccurate chain line, accelerated wear.**

– Use genuine Pinion pulleys (P8592).

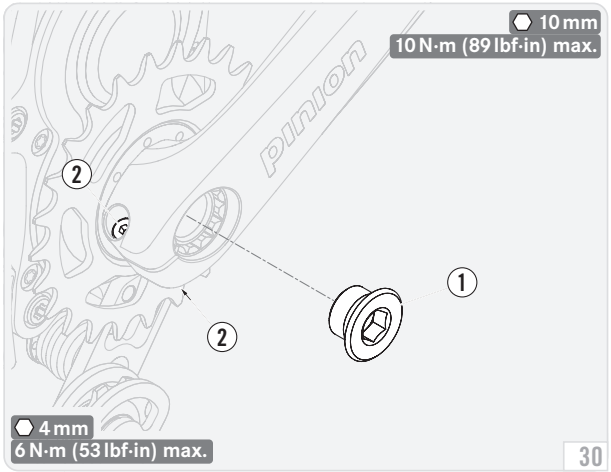

REPLACING CHAIN RING

INFO If you need to replace the chain ring of your Pinion gearbox (because of wear, different gear ratio, replacement by chain ring spider), you can order it with the required tools from one of the Pinion bicycle dealers.

INFO Another method of changing the gear ratio is to replace the sprocket on your rear wheel.

INFO Chain ring, sprocket and chain always wear on opposite sides during use.
This means that the drive might stop working without problems (chain disengages, more noise) if only one of these parts is replaced. We recommend always replacing all these parts if one needs replacing.

➔ Unscrew central crank screw (1).
➔ Slacken both crank clamp screws (2).
➔ Pull the crank from the input shaft.

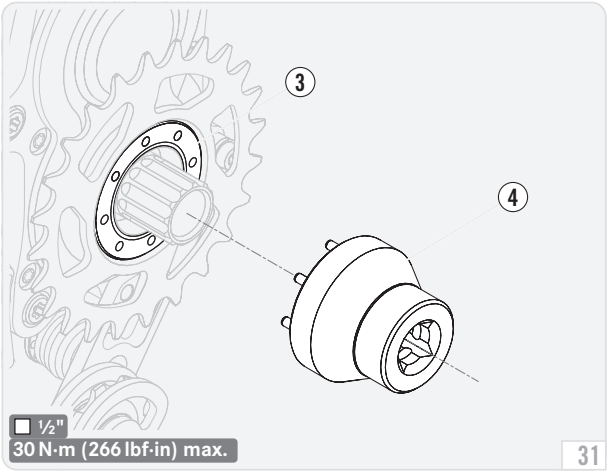

NOTICE **Incorrect removal may damage the chain ring by distorting it.**

- Preferably hold the chain ring by the chain on the rear wheel.
- If necessary, use chain whip carefully, do not tilt it.

➔ Hold chain ring tight.
➔ Unscrew lock ring (3) clockwise (left-hand thread!) with the Pinion lock ring tool (4).
➔ Pull chain ring off the output shaft.

ⓘ INFO The output shaft can show axial play when the chain ring or spider is disassembled – this is normal and no cause for concern!

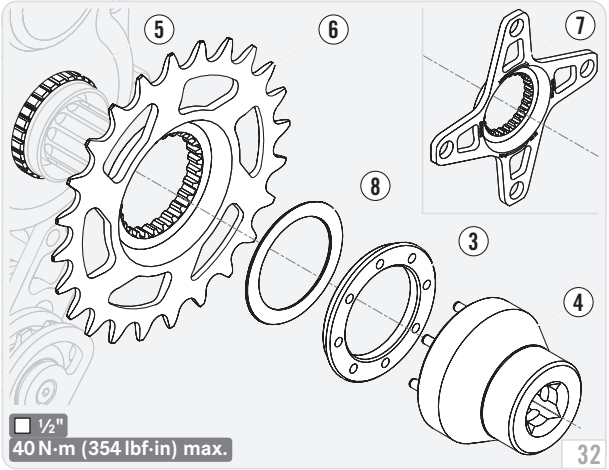

➔ Make sure that the toothing (5) and contact surfaces on the gearbox side and the chain ring (6) or spider (7), disc (8) and lock ring (3) are clean and free from old grease.
➔ Lightly grease the toothing (5).
➔ Put on the chain ring or spider (with chain ring fitted).
➔ Lightly grease the contact areas of the disc (8).
➔ Insert the disc (8) in the chain ring or spider.
➔ Lightly grease the contact area and thread of the lock ring (3).
➔ Screw in lock ring anticlockwise (left-hand thread!) with the Pinion lock ring tool (4).
➔ Hold chain ring at the left crank.
➔ Tighten lock ring (3) with a tightening torque of 40 N·m (354 lbf·in).
➔ Replace chain if necessary – see **CHAIN/TOOTHED BELT – LENGTH & TENSION**, page 61.

• The replacement of the chain ring is complete.

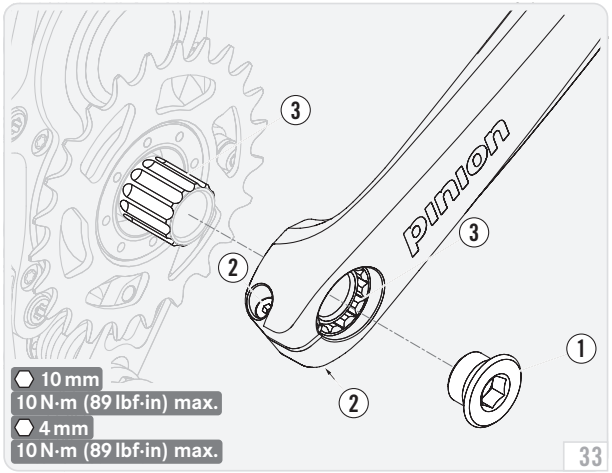

INSTALLING CRANKS

INFO To protect the toothing (3) on the input shaft and cranks from one-sided loads, it is a good idea to remove both cranks regularly (1× a year) and to reinstall them offset by 1–2 teeth and with fresh carbon assembly paste (e.g. *DYNAMIC*).

- ➔ Make sure that the toothing (3) on the input shaft and crank are clean and free from old grease.
- ➔ Make sure that both crank clamp screws (2) are provided with a *SCHNORR*® lock washer.
- ➔ Apply a light coating of carbon assembly paste to the toothing.
- ➔ Position crank and push it manually on the input shaft to the stop, if necessary carefully spread it with a wide screwdriver – do not use any impact tools (hammer etc.).
- ➔ Screw in central crank screw (1) and tighten with a tightening torque of 10 N·m (89 lbf·in).

INFO The crank can now be moved by another 1–2 mm on the input shaft – this is normal and no reason for concern!

WARNING **Incorrectly mounted drive can block and cause an accident.**

- – Always pull the crank outward as far as the stop before tightening the crank clamp screws.
- ➔ Pull the crank outward as far as the stop.
- ➔ Tighten the crank clamp screws (2) in stages and alternately until both crank clamp screws have reached a tightening torque of 10 N·m (89 lbf·in).

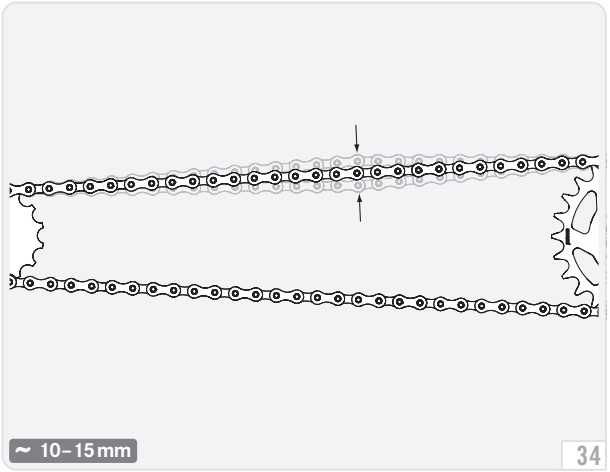

CHAIN/TOOTHED BELT – LENGTH & TENSION

INFO The correct length of a bicycle chain or toothed belt depends on various factors:

- The number of teeth on the sprocket and chain ring or belt sprockets – after replacement it may be necessary to determine the correct length of the bicycle chain or toothed belt again.
- Suspension travel and type of spring rear hub of your bicycle frame – follow the manufacturer's instructions.
- Type of chain tensioner or tensioning system (horizontal dropouts with adjusting screws) – follow the manufacturer's instructions.

The basic rule for the length of a bicycle chain or toothed belt is as short as possible and as long as necessary. The function and adjustment range of your tensioning system and the complete suspension of the rear triangle must not be impaired under any circumstances.

NOTICE **Accelerated wear of the complete drive because of excessively high tension.**

– For direct tension (horizontal dropouts with adjusting screws) make sure that the chain or toothed belt has approx. 10–15 mm play (fig. 34). Follow the manufacturer's precise information.

NOTICE **Accelerated wear of the complete drive because of skewed running.**

– Make sure that the gaps between your rear hub and the chain line or beltline of your Pinion gearbox match – see **TECHNICAL DATA**, page 38.

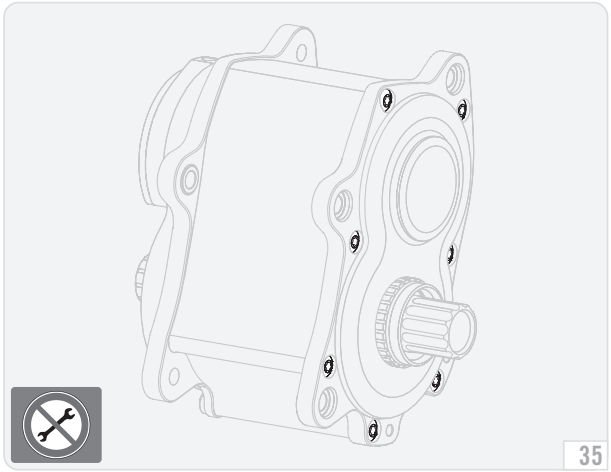

INSTALLING GEARBOX

NOTICE **Irreparable damage to the gearbox housing or leakage.**

- Never tighten or loosen gearbox housing screws. (fig. 35)
- Gearbox housing screws are exclusively allowed to be moved in a specialist workshop authorised by Pinion, or by Pinion itself.

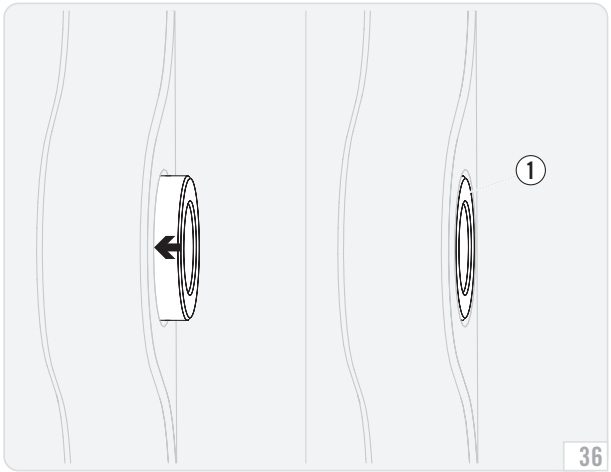

NOTICE **Incorrect installation may distort and damage the gearbox.**

- Make sure that all 4 key sleeves (1) (fig. 36/37) are installed flat in their seats in the gearbox housing – if necessary, press in with a parallel pressing tool (e.g. screw clamp, suitable clamp, etc.) (fig. 36).
- Follow the sequence and tightening torque. (fig. 37)

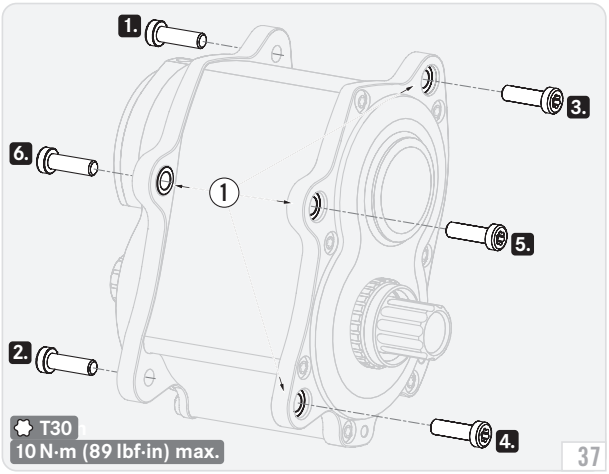

37

ⓘ INFO The gearbox retaining screws are allowed to be reused – providing they have been cleaned and have fresh screwlock (medium-strength) applied to them.

- ➔ Make sure that all contact points between the gearbox and gearbox interface of the bicycle frame are clean and coated with carbon assembly paste (e.g. *DYNAMIC*).
- ➔ Position gearbox in the gearbox interface of the bicycle frame.
- ➔ Install all 6 retaining screws.
- ➔ Tighten retaining screws in the specified sequence with a tightening torque of 10 N·m (89 lbf·in). (fig. 37)
- The installation of the gearbox is complete.

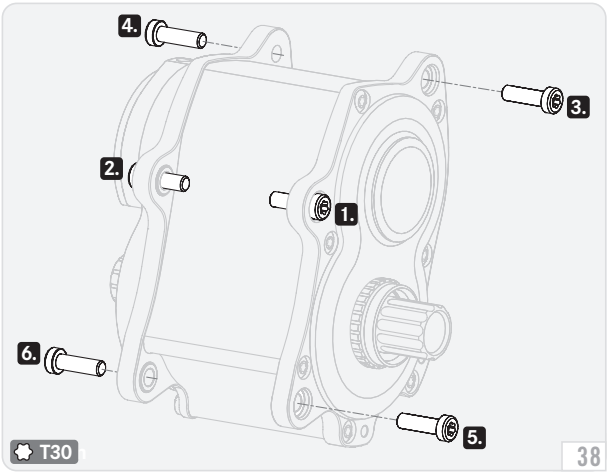

38

REMOVING GEARBOX

Slacken shifting cable at the rotary shifter – see **INSTALLING OR REPLACING SHIFTING CABLES**, page 49.

⚠ CAUTION **Danger of injury if the gearbox drops down – approx. 2.7 kg (6 lb) weight.**

- Get a helper to secure the gearbox during removal.

- ➔ Initially only loosen the 2 middle retaining screws.
- ➔ Unscrew the 4 upper and lower retaining screws.
- ➔ Get a helper to secure the gearbox.
- ➔ Unscrew the 2 middle retaining screws.
- ➔ If necessary, tap the right and left sides of the input shaft alternately with a rubber mallet and remove the gearbox downwards from the gearbox interface of the bicycle frame.

ⓘ INFO The gearbox retaining screws are allowed to be reused – providing they have been cleaned and have fresh screwlock (medium-strength) applied to them.

SERVICE VIDEOS

You can view the following helpful Pinion videos at https://pinion.eu/en/service-videos/ or by scanning the QR code:

- Installing gearbox.
- Removing gearbox.
- Installing rotary shifter.
- Removing rotary shifter.
- Replacing grip/rotary shifter scale.
- Installing shifting cables, P-line.
- Installing cranks, chain ring/spider.
- Removing cranks, chain ring/spider.
- Installing Pinion chain tensioner.
- Removing Pinion chain tensioner.
- Oil change, P-line.

OVERVIEW OF DEALERS

You can view all Pinion dealers at https://pinion.eu/en/dealer-overview/ or by scanning the QR code:

TECHNICAL SUPPORT

If you have any questions about the technology, function, maintenance or a malfunction of your Pinion gearbox, you will find many answers and solutions at https://pinion.eu/en/service/ in our extensive and constantly updated FAQs and troubleshooting lists.

LIABILITY

The legal liability requirements apply for damage to material and workmanship. The liability period starts on the date of initial purchase.

This does not include components that are subject to normal wear (e.g. shifting cable with outer sleeve).

Damage caused by improper use, unintended use or improper installation or maintenance (e.g. opening the gearbox, modifications, etc.) is not included.

We also do not accept liability for immediate or consequential damages arising from negligence.

In case of damage, first contact the dealer from which you purchased your Pinion product.
The dealer will contact the bicycle manufacturer, distributor or us directly to discuss the procedure on your behalf.
Do not return a defective Pinion product directly to us without prior consultation.

WARRANTY

You can find out all information about the Pinion warranty provisions at https://pinion.eu/en/service/ or by scanning the QR code: